For Replacement Parts and Accessories, Contact Your Local Service Center or Call 1-800-626-4401

Please provide the following information:

- Model number
- Serial number
- Part description and number as shown in parts list

Address parts correspondence:
Campbell Hausfeld Powered Products
Attn: Customer Service
100 Mundy Memorial Drive
Mt. Juliet, TN 37122 U.S.A.

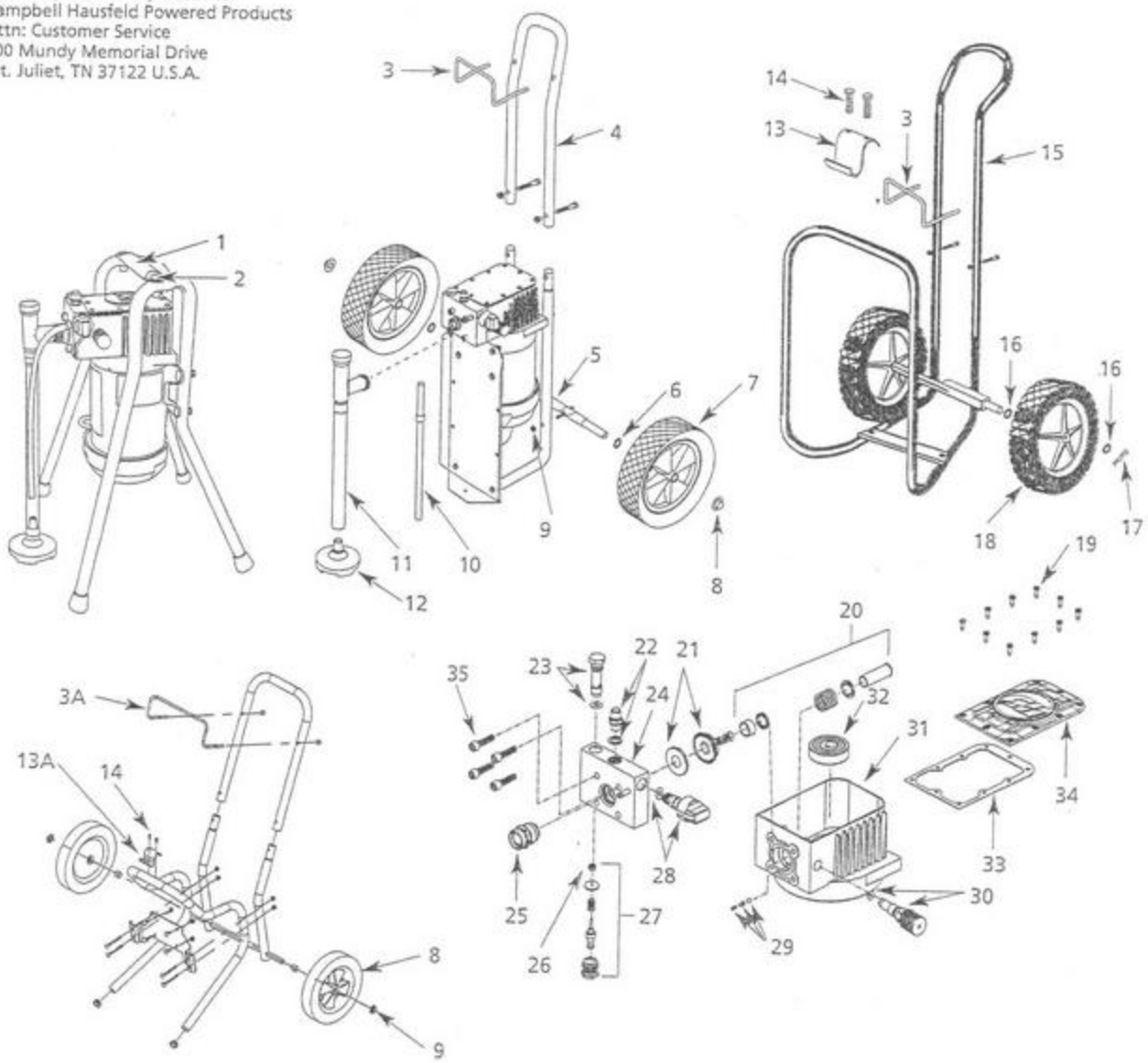

SPINEX
Spinex - Stępniak Spółka Jawna

Assembly (Continued)

NOTICE ***If using a power tool to drive the screws, do not apply too much torque. These are self-tapping screws and will strip out the frame if too much torque is applied.***

11. Drive the two screws provided through the bucket hook and into the frame with a straight screwdriver or a 5/16" nut driver.

Do not attach the suction assembly at this time.

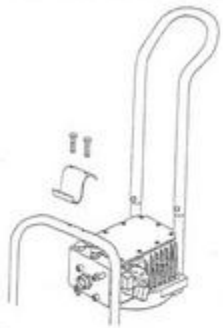

Figure 7 - Install Bucket Hook

Replacement Parts List

Ref. No.	Description	Part Number	Qty.
1	Stand handle	AL172304AV	1
2	Handle bolt	AL152201AV	2
3	Hose rack	AL066101AV	1
3A	Hose rack kit (includes pal nuts)	AL181800SV	1
4	Handle (Includes hose rack)	AL066021SV	1
5	Axle (Includes bolts)	AL066030SV	1
6	Washer	ST090200AV	2
7	Wheel	WA002601AV	2
8	Pal nut	AL066300AV	2
9	Nut	AL060000AV	2
10	By-Pass tube and clamp	AL174300SV	1
11	Suction tube assembly (Includes tube and connectors)	AL138400SV	1
12	Suction bell assy. (Includes filter)	AL111000SV	1
13	Bucket hook (black)	AL136200AD	1
13A	Bucket hook (blue)	AL136205AD	1
14	Screws	HP007117AV	4
15	Handle (Includes hose rack)	AL139200SV	1
16	Washer	AL136000AV	2
17	Cotter pin	AL149700AV	2
18	Wheel	WA002602AV	2
19	Faceplate screws	HP007118AV	1
20	Piston kit	AL131502SV	1
21	Diaphragm kit (Check valve kit included)	See chart	1
22	Hose adapter (Includes washer)	AL104700SV	1
23	Outlet valve assembly	AL129600SV	1
24	Pump block (Incl. all washers)	AL042413SV	1
25	Inlet valve assembly	AL165400SV	1
26	Pushbutton seal	AL162000AV	1
27	Outlet push/pull assy.	AL159500SV	1
28	Prime/Spray valve assembly	AL132100SV	1
29	Check valve kit	AL163200SV	1
30	Pressure valve assembly	AL131401SV	1
31	Housing kit (Includes 20,29, & 30)	See chart	1
32	Eccentric and bearing kit	See chart	1
33	Faceplate gasket	AL013702AV	1
34	Cast faceplate	AL045102AV	1
35	Block bolts	MJ103910AV	4
*	Shaft seal	AL045503AV	1
*	Motor	See chart	1

* Not shown

SPINEX
Spinex - Stępniak Spółka Jawna